# Impeller Minimum Trimming Diameter Definition

# Index

1. Purpose & Scope ....3

2. Definitions ....3

3. General Procedure - Description ....3

4. Methodology, analysis and interpretation of results ....4

4.1. Trimming Recommendations ....5

5. Acceptance Criteria ....7

6. References ....7

## 1. PURPOSE & SCOPE

This procedure defines a standardized methodology for determining the minimum trimming diameter of impellers in centrifugal pumps designed and manufactured within this Organization. The standardized methodology is in accordance with API 610, Hydraulic Institute (HI) standards, and technical literature (e.g. Gülich), with specific considerations for volute, diffuser, and multistage pumps.

This procedure applies to the design, selection, and performance evaluation of centrifugal pumps used in the oil & gas, petrochemical, and power generation industries, including volute and diffuser type and multistage pumps.

This procedure is applicable to Nova Milanese plant and La Spezia plant.

## 2. DEFINITIONS

**BEP** Best Efficiency Point

**$d_2$** Impeller external diameter

**H0** Head at shut-off

**MTD** Minimum Trimming Diameter

**$NPSH_3$** Net Positive Suction Head drop of 3% for pump head (1st stage)

**$NPSH_r$** Net Positive Suction Head required

**$n_q$** Specific speed

**P0** Power at shut-off

## 3. GENERAL PROCEDURE - DESCRIPTION

The trimming of an impeller is typically done adjusting the pump's performance to match the system requirements. The minimum trimming diameter is constrained by:

- Hydraulic performance (efficiency, $NPSH_r$, head).
- Mechanical limits (blade thickness, structural integrity).

According to ANSI/HI standards, the factors limiting Minimum Trimming Diameter are:

- **Resulting Efficiency:** Trimming the impeller reduces the pump's efficiency. At some point, efficiency becomes unacceptably low.
- **Vane Overlap:** Trimming reduces the overlap between impeller vanes. This can cause undesirable flow patterns, especially at flows below the Best Efficiency Point (BEP)
- **Impeller Geometry:** Features like wear rings may limit how much the impeller can be trimmed.
- **Casing Type:** For **diffuser-type casings,** typically limit trimming up to **95%** of the original diameter. **Volute-type casings** may allow trimming up to **80%** of the original diameter. Further trimming may be possible but must be evaluated case by case.

In some cases, only the impeller vanes are trimmed, while the shrouds remain at full diameter. This can help to reduce efficiency loss and avoid pressure pulsation issues.

## 4. METHODOLOGY, ANALYSIS AND INTERPRETATION OF RESULTS

Please refer to **SOP-475** and **SOP-498** to predict pump performance modifications when trimming the impeller. Regarding the minimum impeller diameter, the following formulation from Gülich applicable to volute casing pumps can be used to avoid excessive shortening of the blades:

$$\frac{d_2^{'}}{d_2} \geq 0.8 \; to \; 0.85 \quad for \quad n_q < 40$$

$$\frac{d_2^{'}}{d_2} \geq (0.8 \; to \; 0.85) + 0.0025(n_q - 40) \quad for \quad 40 < n_q < 100$$

The limits defined by this equation apply to medium-sized pumps. The impellers of small pumps (where noise and vibrations are not considered an issue) are sometimes trimmed to diameters smaller than those prescribed by this formula. For more powerful pumps instead, it

is better to trim less the impeller to reduce the risk of vibrations, noise and cavitation. Economic reasons (efficiency degradation) can be considered to limit the minimum impeller diameter.

If a little margin over NPSHr is available, the inflow conditions are unfavorable, or if stringent limits on noise and vibrations are specified, the value 0.85 can be used in the equation or, as an alternative, limit the trimming even further.

### 4.1. TRIMMING RECOMMENDATIONS

- In the case of diffuser pumps, the characteristic head-capacity curve may become unstable if impeller trimming is excessive. The limit must be determined experimentally. In the absence of tests, it is recommended not to trim by more than 5%. If greater trimming is required, a diffuser with a smaller inlet diameter can be designed. Since the diffuser pattern costs are much lower than the costs of a casing pattern, a new diffuser adapted to the trimmed impeller is economically justified at power ratings smaller than those with a volute pump.
- In the case of diffuser pumps, the impeller shrouds are left at full diameters (only the blades are trimmed according to *Figure 1b*) to prevent instabilities of the characteristic head-capacity curve and axial thrust excursions at the partload, and to keep the exchange of momentum between main flow and the liquid rotating in the impeller sidewall gaps as low as possible.
- Since the impeller shrouds of diffuser pumps are not trimmed, the efficiency loss due to trimming is greater than that with volute pumps (the impeller disk friction losses are proportional to $d^5$).
- In the case of volute pumps, the impeller shrouds are trimmed to the same diameter as the blades to reduce disk friction losses (*Figure 1a)*.
- In general, an oblique trim according to *Figure 1c* increases the shut-off pressure compared with parallel trimming and protects against a characteristic head-capacity curve drooping towards Q = 0. The trim angle is mostly selected between 5° and 15°.
- An oblique trim is recommended for specific speeds above $n_q > 40$ so that the outer streamline does not become too short.

- With semi-axial impellers, the position of the blade trailing edges has a major influence on power and head at shut-off. The smaller the ratio between maximum and minimum $d_2$, the smaller $P_o$ and $H_o$ become.
- Pumps with double-entry impellers of low $n_q$ are mostly trimmed so that the blade trailing edges remain parallel to the rotor axis (*Figure 1e*).

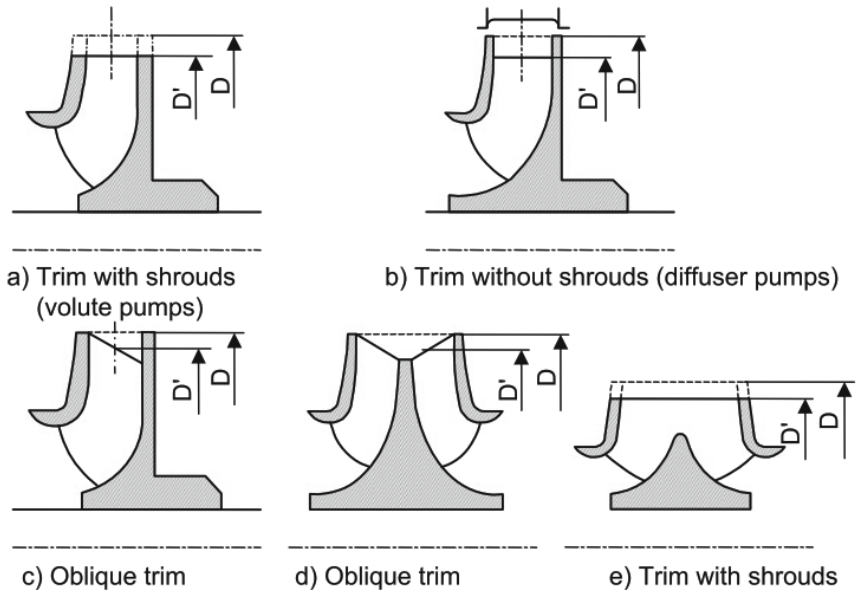


Figure 1. Impeller trimming.

- As a rule, noise and vibrations diminish with slight trimming since the distance between the impeller blades and the collector increases. However, the hydraulic excitation forces may rise again since the blade loading increases with major trimming.
- Since the head reduction caused by trimming depends on parameters that cannot be accurately predicted, an impeller is preferably trimmed in steps. The risk of missing the contractual/desired operating point by an excessive trim is thus reduced.
- Severe trimming (more than 10%) also causes the deterioration of the suction characteristics ($NPSH_3$ increases). One of the reasons for the deterioration is the changed pressure distribution due to blade shortening and increased blade loading. In addition, a 3% drop in a severely reduced head constitutes a smaller change in head and thus less cavitation. Therefore, the suction impeller should preferably not be

trimmed in multistage pumps. As an alternative, the suction impeller is trimmed less than the series stages if the pump has only a few stages.

## 5. ACCEPTANCE CRITERIA

If no test data are available, please consider **SOP-475** and **SOP-498** to estimate the pump performance curve at the trimmed diameter.

Trim the impeller in steps to match the required operating conditions. When defining the minimum impeller diameter for a specific pump size to calculate its saleable coverage, consider the formulation provided by Gülich along with the recommendations from the Hydraulic Institute.

## 6. REFERENCES

[1] ANSI-HI 1.3 – 2013 Rotodynamic Centrifugal Pumps

[2] **SOP-475** “Method for Refiguring Pump Performance from Tested Data”

[3] **SOP-498** “Trimming Coefficients Definition”

[4] Centrifugal Pumps, Fourth Edition by Johann Friedrich Gülich, Springer Nature Switzerland AG 2020